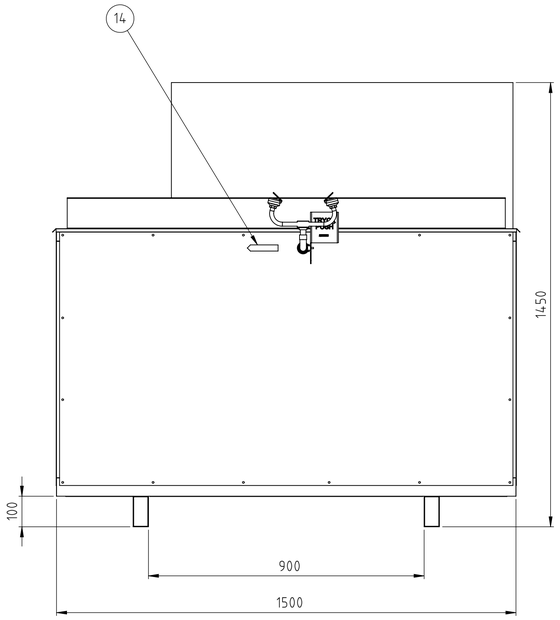

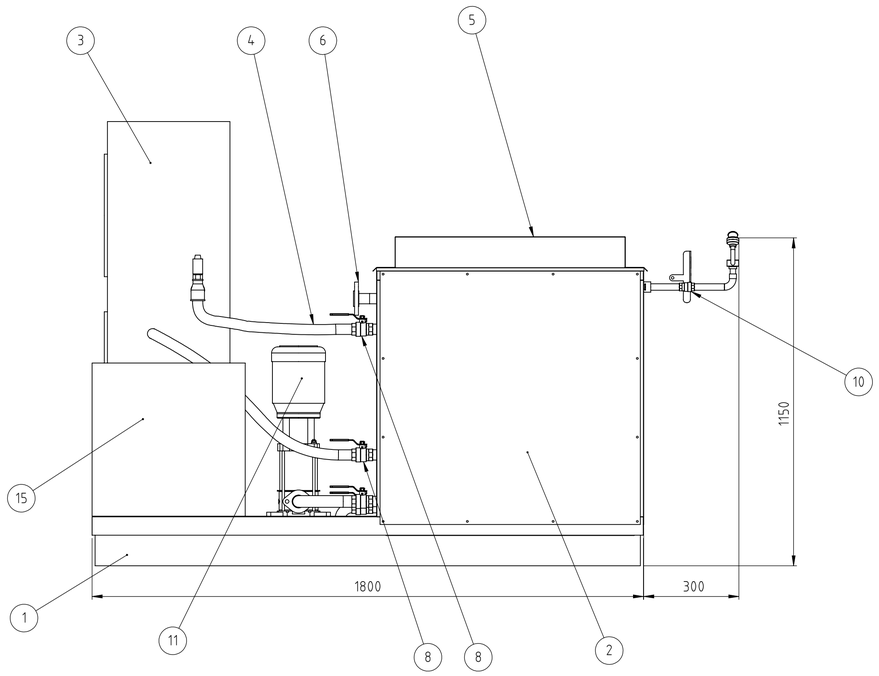

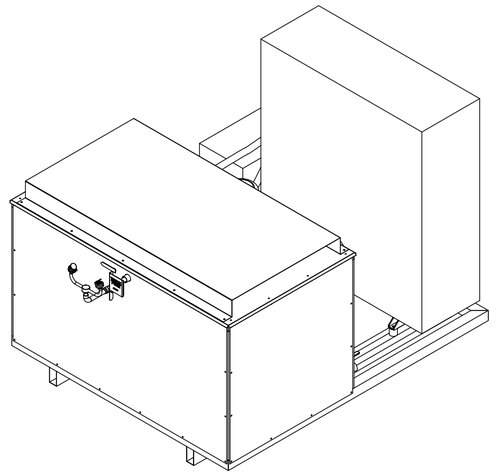

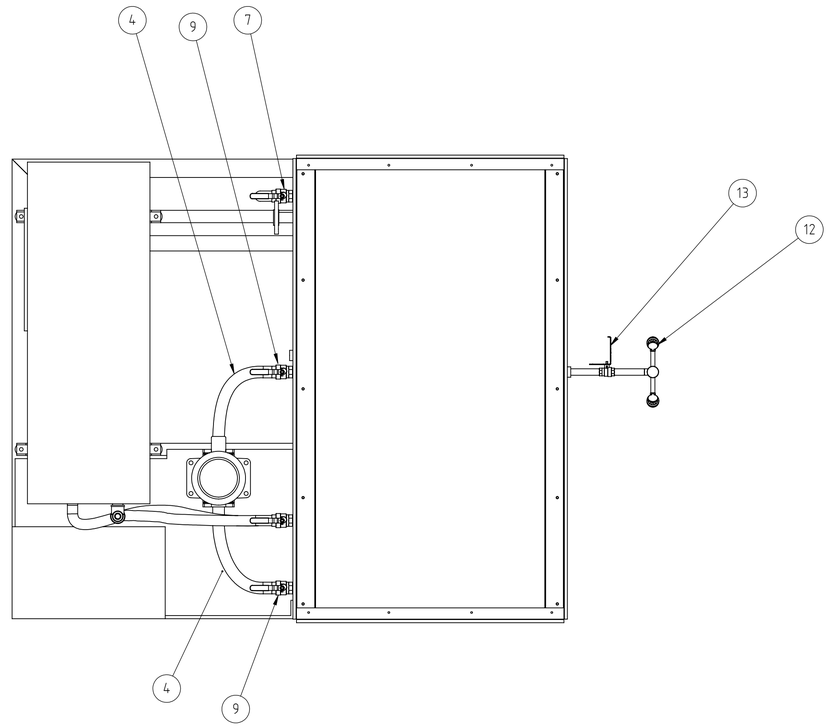

Weight (empty tank) approximately 400kg.

Pos.Nr	Qty	Description
15	1	Converter unit
14	1	Water level meter
13	1	Push plate - Eye wash
12	1	Spray head - Eye wash
11	1	Booster pump
10	1	Ball valve 1/2" - Eye wash
9	2	Ball valve 1" - Booster pump
8	2	Ball valve 1" - Cooling unit
7	1	Ball valve 1" - Emtying the tank
6	1	Flange 1" ANSI 150lb - Incoming water
5	1	Sun visor
4	4	Flexible hose
3	1	Cooling unit
2	1	Isolated water tank, 500L
1	1	Complete frame

Owner

Krusman

+46 (0)21 14 92 00
www.krusman.com

Ritad/Konstruerad Av: Martin Ringkvist
Godkänd Av: DK
Skapad Datum: 20120604
Skala: 1:10

Titel / Benämning:
Emergency tank shower
Model 7040
Dimension drawing

Generell Tolerans: ISO 2768-m
Ritningsnummer: 7040-010
Rev:
Blad: 1 (1)

This document must not be copied without our written permission, and the contents thereof must not be imparted to a third party nor be used for any unauthorized purpose. Contravention will be prosecuted.